Early Childhood RESOURCES

Mount Laurel,NJ 08054 USA
www.ecr4kids.com

Multi-Section Storage Unit
Model ELR-0641

BEFORE ASSEMBLING, MAKE SURE THERE ARE NO MISSING PARTS.

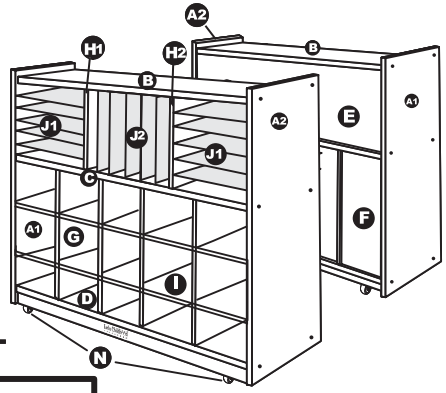

PARTS LIST

- A1 Left Side Panel
- A2 Right Side Panel
- B Top Shelf
- C Middle Shelf
- D Bottom Shelf
- E Upper Back Panel
- F Lower Back Panel(5)
- G Lower Middle Panel(4)
- H1 Left Upper Middle Panel
- H2 Right Upper Middle Panel
- I Middle Shelves(2)
- J1 Horizontal Dividers(10)
- J2 Vertical Dividers(5)
- K Metal Dowels(12)
- L Large Hex Screw(24)
- M Hex Key Tool
- N Wheel Casters(4)-optional
- O Caster Screws(16)
- P Cams(12)

NOTE:
A Phillips Head Screwdriver will be needed for Assembly(not included)

TIP!
DO NOT FULLY TIGHTEN SCREWS UNTIL ALL SCREWS HAVE BEEN LOOSELY POSITIONED.

WARNING:

- **Adult Assembly Required.** Two adults recommended.
- Contains small parts, sharp points and edges.
- Do not stand, sit, kneel, climb, lean or pull on unit for support.
- Never leave children unattended.
- Do not place unit near high heat or moisture.
- Adult Supervision Recommended.

If you experience any difficulties with this product, please email us at **customerservice@ecr4kids.com** or call toll-free at (888) 227-9028 (Mon. through Fri., 8:00am to 4:00pm Eastern Standard Time)

Please do not return to place of purchase as Early Childhood Resources will replace defective part(s) and/or product.

1 Attach the Dividers to the Bottom Shelf

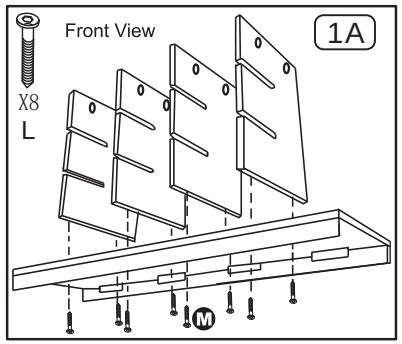

1. Attach Bottom Shelf(D) to the Lower Middle Panels(G) with 8 Large Hex Screws(L), using 2 in each. Tighten with the Hex Key Tool(M)

2 Insert Back Panels

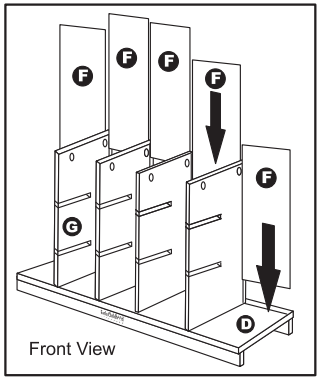

2. Slide the 3 Lower Back Panels(F) into the grooves between the 4 Lower Middle Panels(G) until fully inserted into the slots in the Bottom Shelf(D). Position the last 2 Lower Back Panels(F) into the grooves on the outer edge of the Lower Middle Panels(G) and Bottom Shelf(D).

3 Assemble the Top Section

3. Attach the 2 Upper Middle Panels(H1 & H2) to the Middle Shelf(C) using 4 Large Hex Screws(L), using 2 in each. Tighten with the Hex Key Tool(M).

Note: *Make sure the side of the panel with the 5 grooves are facing outward toward the Side Panels, as shown.*

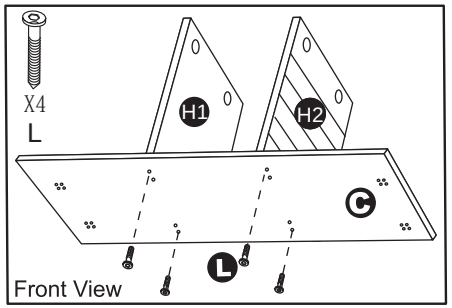

4 Attach the Top Shelf

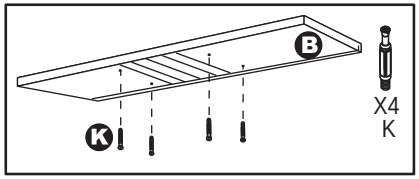

4A. Insert 4 Metal Dowels(K) into the plastic plugs located underneath Top Shelf(B). Tighten with a Phillips Screwdriver.

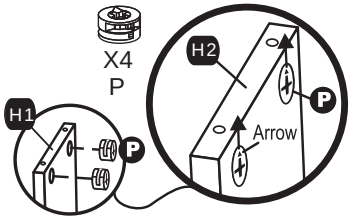

4B. Insert 4 Cams(P) into the large holes in each of the Upper Middle Panels(H1,H2) using 2 in each. Make sure the arrows on Cams(P) point toward the holes in the closest edge.

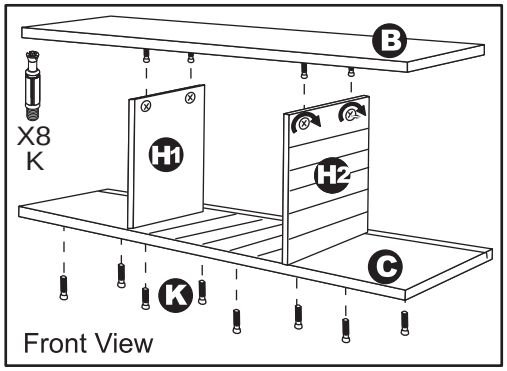

4C. Position Top Shelf(B) so the attached Metal Dowels(K) enter holes in the top edge of Upper Middle Panel(H). Turn Cams(P) with a Phillips Screwdriver until locked onto the Metal Dowels(K).

4D. Insert 8 Metal Dowels(K) into the plastic plugs located underneath Middle Shelf(C). Tighten with a Phillips Head Screwdriver.

5 Insert Middle Shelves and Attach the Top and Bottom Sections

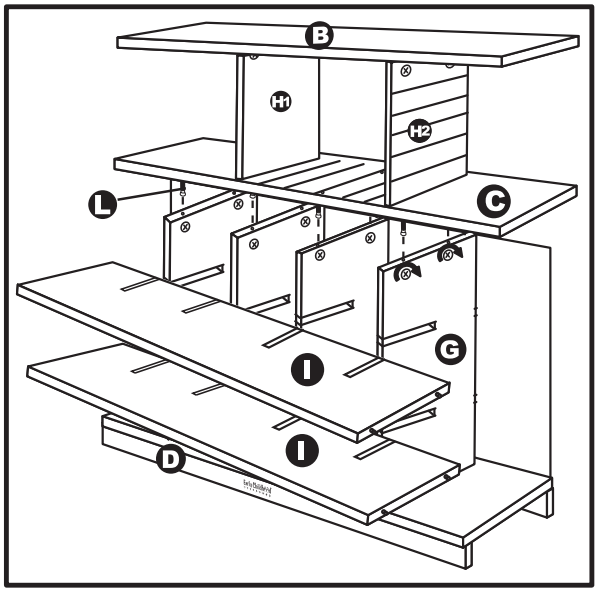

5A. Position the Middle Shelf(C) section so the attached Metal Dowels(K) enter the holes in the top edge of the Lower Middle Panel(G). Turn Cams(P) with a Phillips Screwdriver until locked onto the Metal Dowels(K).

4B. Insert the MIddle Shelves(I) into the the slots in the front of the Lower Middle Panels(G) as shown, until full inserted into the slots.

Version: ELR-0641.D.2010.01.02

6 Attach the Left Side and Upper Back Panel

6A. **Two Adults Suggested:** On a carpet or protected surface, carefully lay the unit down, facing upward. Attach the Left Side Panel(A1) with 6 Large Hex Screws(L). Tighten using Hex Key Tool(M).

6B. Slide the Upper Back Panel(E) into the grooves between the Top & Middle Shelves(B,C) as shown, until fully inserted into the slot and is flush against Left Side Panel(A1).

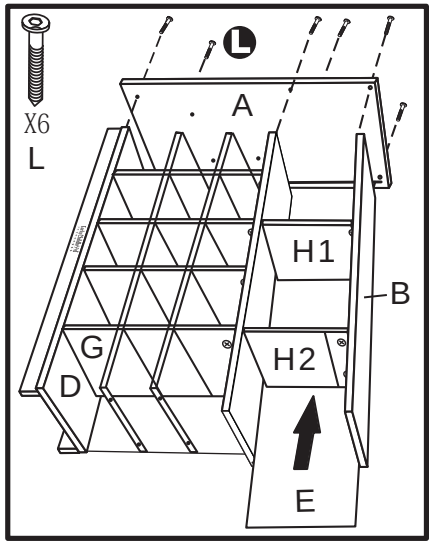

TIP:

- If the Back Panel does not slide easily into the grooves, wiggle the Back while pushing the panel into the slot.
- You may also turn the rear Cams on the shelf above or below to unlock, push the Back until fully inserted into the slot, then turn Cams to the locked position again.

7 Attach the Wheel Casters (Optional)

7. **Two Adults Suggested:** Carefully lay the turn the unit onto its Left Side(A1) as shown. Attach the 4 Wheel Casters(N) underneath Bottom Shelf(D) with 16 Caster Screws(O), using 4 per caster. Tighten the Caster Screws(O) using a Phillips Head Screwdriver.

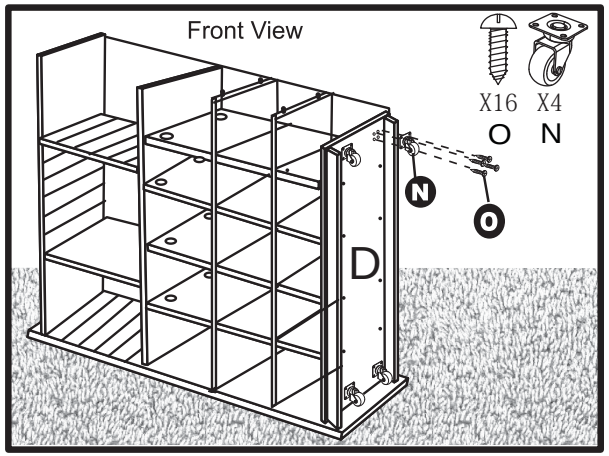

8 Attach the Right Side

8. With the unit still on its Left Side(A1), attach Right Side (A2) using 6 Large Hex Screws(L). Tighten with the Hex Key Tool(M).

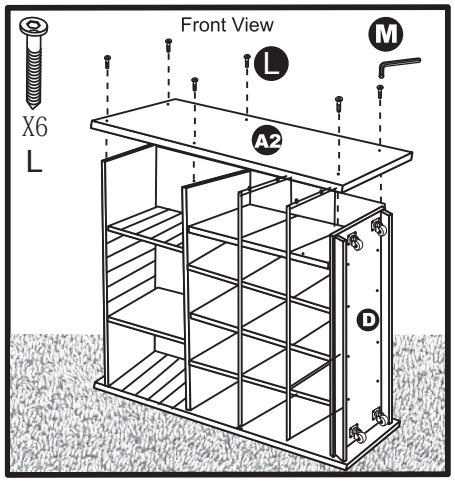

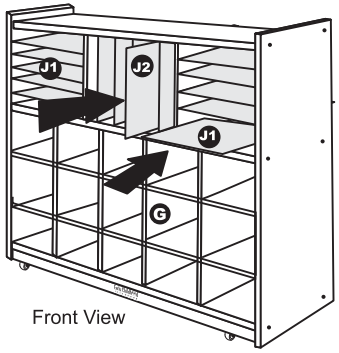

8 Insert the Vertical Dividers

8. **Two Adults Suggested:** Carefully turn the unit upright. Slide 10 Horizontal Dividers(J1) and the 5 Vertical Dividers(J2) into the grooves between the Left Side(A1), Upper Middle Panels(H1&H2), and Right Side(A2) as shown, until fully inserted into the slot.

9 Tighten All Screws

Make sure all screws and hardware are fully tightened before using. Periodically check hardware and tighten as necessary.

YOU ARE DONE!

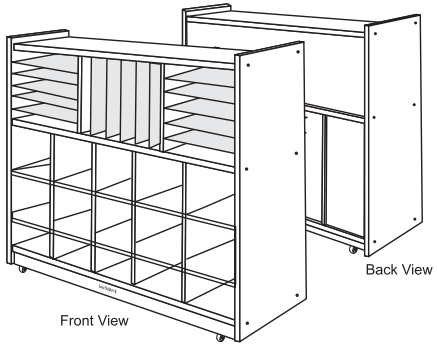

⚠ CAUTION:

- Do not allow children to climb on shelves.
- Do not use as a ladder, seat or cart.

Early Childhood RESOURCES

We appreciate your purchase of the Multi-Section Storage Cabinet. Early Childhood Resources® has made every effort to supply a quality product, that with proper use and care, will bring you many years of trouble free use!

Care and Cleaning

Clean wood with a damp cloth or sponge using warm water and mild soap. Wipe dry.

Do not place near heat, moisture or vaporizer which may cause wood to warp and peel.

Check for loose or worn parts periodically and tighten or replace as necessary.

QUALITY SATISFACTION GUARANTEED

"Early Childhood Resources® guarantees the quality of all of our products. You can trust the quality and safety of our furniture and materials, along with the peace of mind that our products are made to last. If for any reason, you are not satisfied with the quality and workmanship of our products, we will replace the item or refund the sale."

Record the Purchase Order Number here. Information is located on a label enclosed, and on the shipping carton. Place label and this sheet in an accessible place.

Model Number: **ELR-0641**

Purchase Order Number: _____

Version: ELR-0641.D.2010.01.02